Product datasheet

Specifications

Green Premium™

ZB5R transmitter complete, red cap

ZB5RTA4

Main

Range Of Product	Harmony XB5
Product Or Component Type	Wireless and batteryless transmitter
Device Short Name	XB5R
Bezel Material	Dark grey plastic
Fixing Collar Material	Plastic
Mounting Diameter	22 mm
Transmission Frequency	2405 MHz
Emission Class	5M00G7W
Antenna Type	Omnidirectional

Complementary

Shape Of Signaling Unit Head	Round
Type Of Operator	spring return push-button with transmitter
Operator Profile	Red flush
Max Power Consumption In W	1 mW
Number Of Channels	16
Modulation Technique	O-QPSK
Bandwidth	5 MHz
Antenna Gain	0 dBi
Embedding Depth	42 mm
Cad Overall Height	41.5 mm
Cad Overall Width	30 mm
Cad Overall Depth	43 mm
Net Weight	0.045 kg
Operating Travel	4.3 mm (total travel)
Operating Force	10 N C/O changing electrical state
Mechanical Robustness	Free fall resistance 1000 mm conforming to EN/IEC 60068-2-32
Standards	CSA C22.2 No 14 EN/IEC 60947-1 EN/IEC 60947-5-1 UL 508

Excluding VAT, FCA Jabal Ali & are subject to change – check with your local distributor.

Disclaimer: This documentation is not intended as a substitute for and is not to be used for determining suitability or reliability of these products for specific user applications

Radio Agreement	ANATEL ARIB T66 FCC ICASA RSS
Communication Port Protocol	Zigbee green power at 2.4 GHz conforming to IEEE 802.15.4
Maximum Sensing Distance	100 m in free field 25 m transmitter in a plastic box type XAL D and receiver in a metal enclosure 300 m transmitter in box type XAL D, receiver in metal enclosure and use relay-antenna
Acquisition Time	2 ms
Response Time	< 2 ms
Emission Power	3 mW
Fixing Mode	Fixing nut beneath head: 2…2.4 N.m
Station Name	XALD 1...5 cut-outs XALK 2...5 cut-outs
Electrical Composition Code	PW1

Environment

Ambient Air Temperature For Storage	-40…70 °C
Ambient Air Temperature For Operation	-40…70 °C
Relative Humidity	95 % at -40…70 °C without condensation
Ip Degree Of Protection	IP66 (front face) conforming to IEC 60529 IP67 (front face) conforming to IEC 60529 IP69 (front face) conforming to IEC 60529 IP69K (front face) conforming to IEC 60529
Ik Degree Of Protection	IK03 conforming to IEC 50102
Mechanical Durability	1000000 cycles
Shock Resistance	25 gn (duration = 6 ms) for 6000 shocks conforming to IEC 60068-2-27 30 gn (duration = 18 ms) for half sine wave acceleration conforming to IEC 60068-2-27 50 gn (duration = 11 ms) for half sine wave acceleration conforming to IEC 60068-2-27
Vibration Resistance	5 gn (f= 11…500 Hz) conforming to IEC 60068-2-6 +/- 10 mm (f= 2…11 Hz) conforming to IEC 60068-2-6
Electromagnetic Compatibility	Electrostatic discharge immunity test - test level: 8 kV (in free air (in insulating parts)) conforming to IEC 61000-4-2 Electrostatic discharge immunity test - test level: 4 kV (on contact (on metal parts)) conforming to IEC 61000-4-2 Susceptibility to electromagnetic fields - test level: 20 V/m (80...3000 MHz) conforming to IEC 61000-4-3 Susceptibility to electromagnetic fields - test level: 6 V/m (3000...6000 MHz, distance = 20 m) conforming to IEC 61000-4-3
Product Certifications	BT 2006/95/EC UL GOST CSA C-Tick
Directives	1999/5/EC - R&TTE directive 2004/108/EC - electromagnetic compatibility

Packing Units

Unit Type Of Package 1	PCE
Number Of Units In Package 1	1
Package 1 Height	3.4 cm

Package 1 Width	5.3 cm
Package 1 Length	8.7 cm
Package 1 Weight	38 g
Unit Type Of Package 2	S01
Number Of Units In Package 2	25
Package 2 Height	15 cm
Package 2 Width	15 cm
Package 2 Length	40 cm
Package 2 Weight	1.151 kg

Contractual warranty

Warranty	18 months

Sustainability

Green Premium™ label is Schneider Electric's commitment to delivering products with best-in-class environmental performance. Green Premium promises compliance with the latest regulations, transparency on environmental impacts, as well as circular and low-CO_2 products.

Guide to assessing product sustainability is a white paper that clarifies global eco-label standards and how to interpret environmental declarations.

Learn more about Green Premium >

Guide to assess a product's sustainability >

Transparency RoHS/REACh

Well-being performance

Mercury Free

Rohs Exemption Information Yes

Certifications & Standards

Reach Regulation	REACh Declaration
Eu Rohs Directive	Pro-active compliance (Product out of EU RoHS legal scope)
China Rohs Regulation	China RoHS declaration
Environmental Disclosure	Product Environmental Profile
Weee	The product must be disposed on European Union markets following specific waste collection and never end up in rubbish bins
Circularity Profile	End of Life Information

Dimensions Drawings

Wireless and Batteryless Pushbutton - Transmitter

With Plastic Pushbutton without Cap

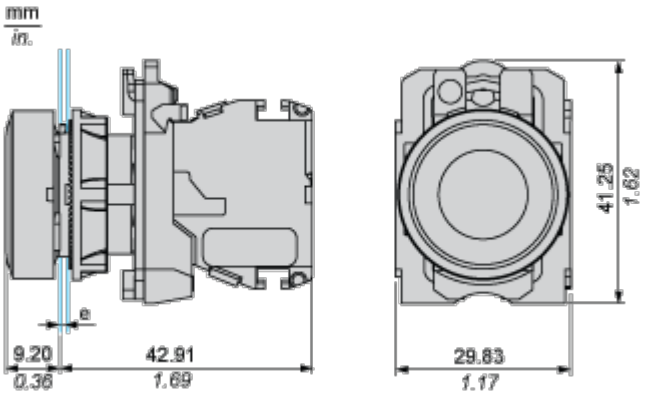

e: panel thickness 1 to 6 mm / 0.039 to 0.24 in.

Mounting and Clearance

Transmitter Mounting

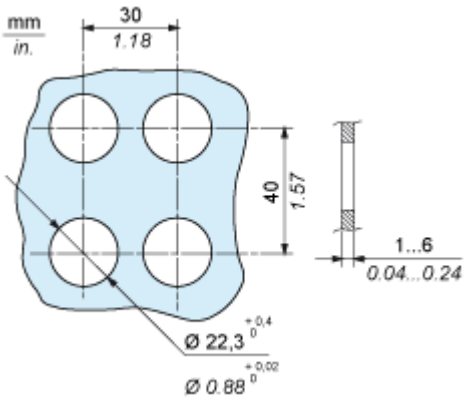

Transmitter Clearance in Free Field Unobstructed

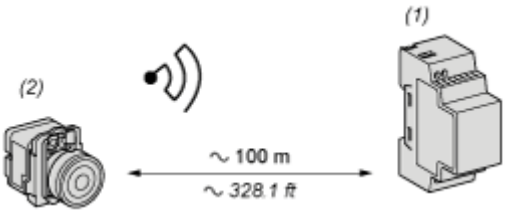

(1): Receiver

(2): Transmitter

Transmitter Clearance in a Metal Enclosure

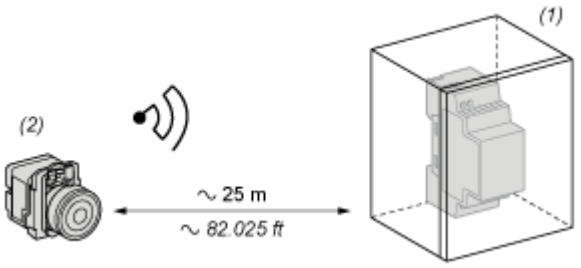

(1): Metal enclosure

(2): Transmitter

The range is reduced if the transmitter is placed in a metal enclosure (reduction factor:approx 10%)

Glass window	10...20 %
Plaster wall	30...45 %
Brick wall	60 %
Concrete wall	70...80 %
Metal structure	50...100 %