Product datasheet

Specifications

green rectang flush pushbutton head Ø16 spring return unmarked

ZB6DA3

Main

Range Of Product	Harmony XB6
Product Or Component Type	Head for non-illuminated push-button
Device Short Name	ZB6
Bezel Material	Plastic
Mounting Diameter	16 mm
Sale Per Indivisible Quantity	1
Shape Of Signaling Unit Head	Rectangular
Type Of Operator	spring return
Operator Profile	Green flush, unmarked

Complementary

Cad Overall Width	24 mm
Cad Overall Height	18 mm
Cad Overall Depth	33 mm
Net Weight	0.016 kg

Environment

Protective Treatment	TC
Ambient Air Temperature For Storage	-40…70 °C
Ambient Air Temperature For Operation	-25…70 °C
Electrical Shock Protection Class	Class II conforming to IEC 61140
Ip Degree Of Protection	IP65 conforming to IEC 60529
Nema Degree Of Protection	NEMA 13 conforming to UL 50 NEMA 4 conforming to UL 50 NEMA 4X conforming to UL 50 NEMA 13 conforming to CSA C22.2 No 94 NEMA 4 conforming to CSA C22.2 No 94 NEMA 4X conforming to CSA C22.2 No 94
Standards	UL 508 JIS C 852 CSA C22.2 No 14 EN/IEC 60947-1 EN/IEC 60947-5-5 JIS C8201-5-1 EN/IEC 60947-5-1 JIS C8201-1

Excluding VAT, FCA Jabal Ali & are subject to change – check with your local distributor.

Disclaimer: This documentation is not intended as a substitute for and is not to be used for determining suitability or reliability of these products for specific user applications

Product Certifications	UL GOST CCC CSA
Vibration Resistance	+/- 3 mm (f= 2…500 Hz) conforming to IEC 60068-2-6 5 gn (f= 2…500 Hz) conforming to IEC 60068-2-6
Shock Resistance	30 gn (duration = 18 ms) for half sine wave acceleration conforming to IEC 60068-2-27 50 gn (duration = 11 ms) for half sine wave acceleration conforming to IEC 60068-2-27

Packing Units

Unit Type Of Package 1	PCE
Number Of Units In Package 1	1
Package 1 Height	3.000 cm
Package 1 Width	3.600 cm
Package 1 Length	13.700 cm
Package 1 Weight	9.000 g
Unit Type Of Package 2	S01
Number Of Units In Package 2	80
Package 2 Height	15.000 cm
Package 2 Width	15.000 cm
Package 2 Length	40.000 cm
Package 2 Weight	891.000 g

Contractual warranty

Warranty	18 months

Sustainability

Green Premium™ label is Schneider Electric's commitment to delivering products with best-in-class environmental performance. Green Premium promises compliance with the latest regulations, transparency on environmental impacts, as well as circular and low-CO_2 products.

Guide to assessing product sustainability is a white paper that clarifies global eco-label standards and how to interpret environmental declarations.

Learn more about Green Premium >

Guide to assess a product's sustainability >

Transparency RoHS/REACh

Well-being performance

Reach Free Of Svhc	
Toxic Heavy Metal Free	
Mercury Free	
Rohs Exemption Information	Yes

Certifications & Standards

Reach Regulation	REACh Declaration
Eu Rohs Directive	Pro-active compliance (Product out of EU RoHS legal scope) EU RoHS Declaration
China Rohs Regulation	China RoHS declaration
Environmental Disclosure	Product Environmental Profile
Circularity Profile	End of Life Information

Dimensions Drawings

Rectangular Head for Illuminated or Non Illuminated Pushbutton

Dimensions

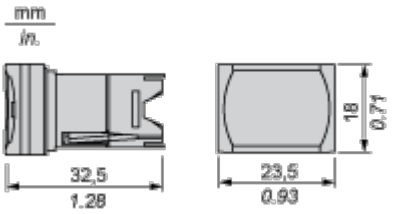

Mounting and Clearance

Panel Cut-out

For Rectangular Head

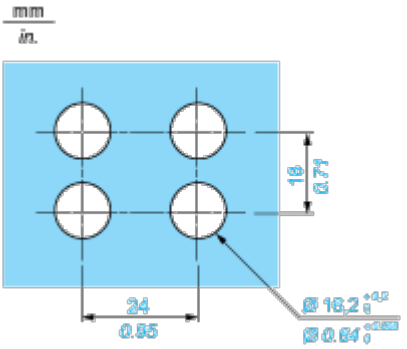

Pushbuttons, Switches and Pilot Lights for Printed Circuit Board Connection

Front Panel Cut-out (Viewed from Installer's Side)

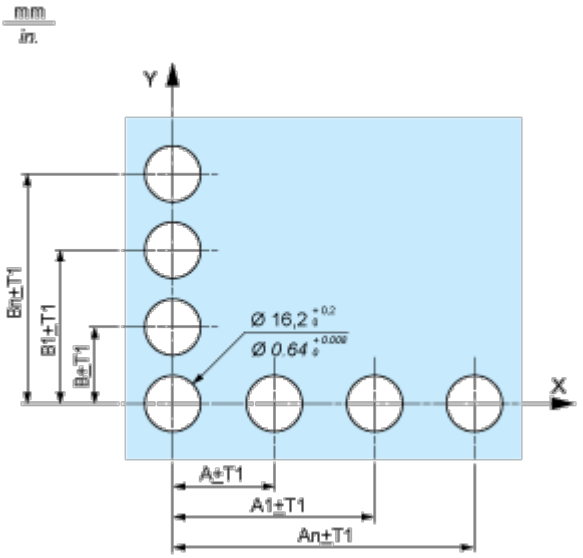

Printed Circuit Board Drillings (Viewed from Electrical Block Side)

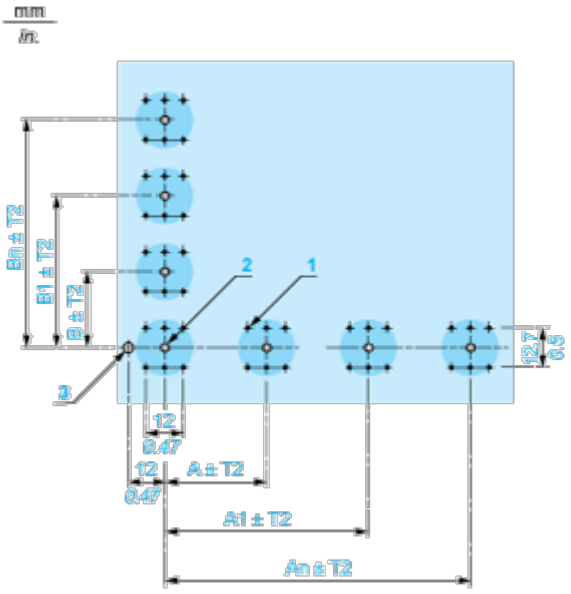

A 24 mm/0.94 in. minimum for rectangular heads, 18 mm/0.71 in. minimum for square or circular heads

B 18 mm/0.71 in. minimum

(1) 6 x Ø 1.1 mm / 6 x Ø 0.04 in. holes.

(2) 1 x Ø $2.6^{0}_{-0.2}$ mm / 1 x Ø $0.10^{0}_{-0.008}$ in. hole for locating pin, only when using socket adaptor ZB6Y010.

(3) 1 x Ø $3.2^{0}_{-0.2}$ mm / 1 x Ø $0.13^{0}_{-0.008}$ in. hole for fixing of printed circuit board onto the front panel using body bracket ZB6Y011. This hole must be drilled on the left-hand side, when heads are positioned at the normal angle. Fit a body bracket ZB6Y011 every 72 mm/2.83 in. maximum for cut-outs on 24 mm/0.94 in. centres (rectangular heads) and 54 mm/2.13 in. maximum for cut-outs on 18 mm/0.71 in. centres (square or circular heads).

General tolerances of the panel and printed circuit board: T1, T2: T1 + T2 = 0.3 mm/0.01 in. maximum.
Installation precautions:

Thickness of printed circuit board: 1.6 mm/0.06 in. minimum.

Mounting with Body Bracket

With socket adaptor ZB6Y010

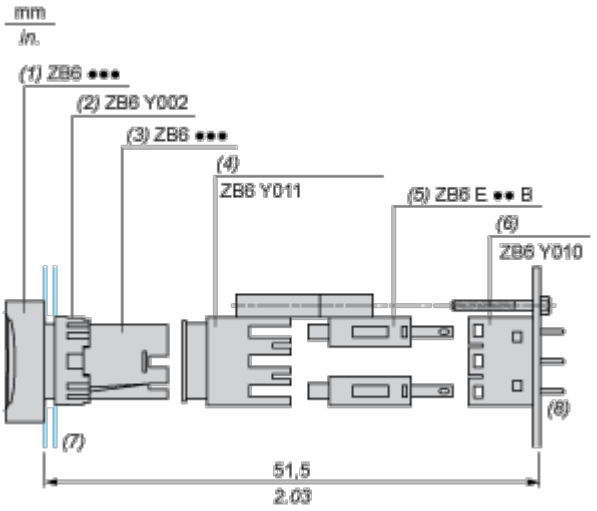

(1) Head

(2) Nut

(3) Body

(4) Body bracket

(5) Contact block

(6) Socket adaptor

(7) Panel

(8) Printed circuit

Direct mounting without socket adaptor ZB6Y010

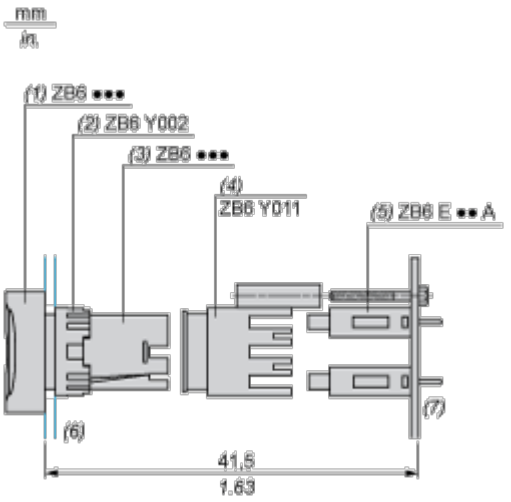

(1) Head

(2) Nut

(3) Body

(4) Body bracket

(5) Contact block

(6) Panel

(7) Printed circuit